# SHARP SERVICE MANUAL

No. SX6Y9LC37D43U

## LCD COLOR TELEVISION

# LC-32D43U
# MODELS LC-37D43U

In the interests of user-safety (Required by safety regulations in some countries) the set should be restored to its original condition and only parts identical to those specified be used.

## OUTLINE

This model is based on the LC-32D42U/LC-37D42U and partially modified.
For the contents not covered in this Service Manual, accordingly, please refer to the LC-32D42U/LC-37D42U (S06X9LC32D42U) Service Manual.

## CONTENTS

**DIFFERENCES FROM BASE MODEL**
LIST OF CHANGED PARTS ..... i

**SAFETY PRECAUTION**
IMPORTANT SERVICE SAFETY PRECAUTION ..... ii
PRECAUTIONS A PRENDRE LORS DE LA REPARATION .....iii
PRECAUTIONS FOR USING LEAD-FREE SOLDER ..... iv

**CHAPTER 1. SPECIFICATIONS**
[1] SPECIFICATIONS.....1-1

**CHAPTER 2. OPERATION MANUAL**
[1] OPERATION MANUAL.....2-1

**CHAPTER 3. DIMENSIONS**
[1] DIMENSIONS.....3-1

**Parts Guide**

Parts marked with "⚠" are important for maintaining the safety of the set. Be sure to replace these parts with specified ones for maintaining the safety and performance of the set.

SHARP CORPORATION

This document has been published to be used for after sales service only.
The contents are subject to change without notice.

# DIFFERENCES FROM BASE MODEL

## LIST OF CHANGED PARTS

| Ref. No. | Description | LC-32D42U/LC-37D42U | LC-32D43U/LC-37D43U | Note |
|---|---|---|---|---|
| PRINTED WIRING BOARD ASSEMBLIES | | | | |
| | MAIN Unit | DUNTKD862FM04 | DUNTKD862FM04 | No Changes |
| | R/C, LED Unit | DUNTKD909FM02 | DUNTKD909FM02 | No Changes |
| | KEY Unit | DUNTKD910FM02 | DUNTKD910FM02 | No Changes |
| | AV TERMINAL Unit | DUNTKD999FM04 | DUNTKD999FM04 | No Changes |
| | POWER Unit | RDENCA198WJQZ | RDENCA198WJQZ | No Changes |

Refer to the PARTS GUIDE for CABINET PARTS, SUPPLIED ACCESORIES,PACKING PARTS and SERVICE JIGS.

# SAFETY PRECAUTION

## IMPORTANT SERVICE SAFETY PRECAUTION

■ **Service work should be performed only by qualified service technicians who are thoroughly familiar with all safety checks and the servicing guidelines which follow:**

### ■WARNING

1. For continued safety, no modification of any circuit should be attempted.
2. Disconnect AC power before servicing.

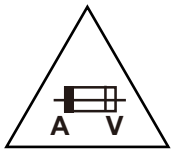


**CAUTION**: FOR CONTINUED PROTECTION AGAINST A RISK OF FIRE REPLACE ONLY WITH SAME TYPE FUSE.

F701 (125V 8A),
F4701, F5701 (250V 3A ~ 115°C)

### ■BEFORE RETURNING THE RECEIVER (Fire & Shock Hazard)

**Before returning the receiver to the user, perform the following safety checks:**

3. Inspect all lead dress to make certain that leads are not pinched, and check that hardware is not lodged between the chassis and other metal parts in the receiver.
4. Inspect all protective devices such as non-metallic control knobs, insulation materials, cabinet backs, adjustment and compartment covers or shields, isolation resistor-capacitor networks, mechanical insulators, etc.
5. To be sure that no shock hazard exists, check for leakage current in the following manner.

- Plug the AC cord directly into a 120 volt AC outlet.
- Using two clip leads, connect a 1.5k ohm, 10 watt resistor paralleled by a 0.15µF capacitor in series with all exposed metal cabinet parts and a known earth ground, such as electrical conduit or electrical ground connected to an earth ground.
- Use an AC voltmeter having with 5000 ohm per volt, or higher, sensitivity or measure the AC voltage drop across the resistor.
- Connect the resistor connection to all exposed metal parts having a return to the chassis (antenna, metal cabinet, screw heads, knobs and control shafts, escutcheon, etc.) and measure the AC voltage drop across the resistor.

All checks must be repeated with the AC cord plug connection reversed. (If necessary, a nonpolarized adaptor plug must be used only for the purpose of completing these checks.)

Any reading of 0.75 Vrms (this corresponds to 0.5 mA rms AC.) or more is excessive and indicates a potential shock hazard which must be corrected before returning the monitor to the owner.

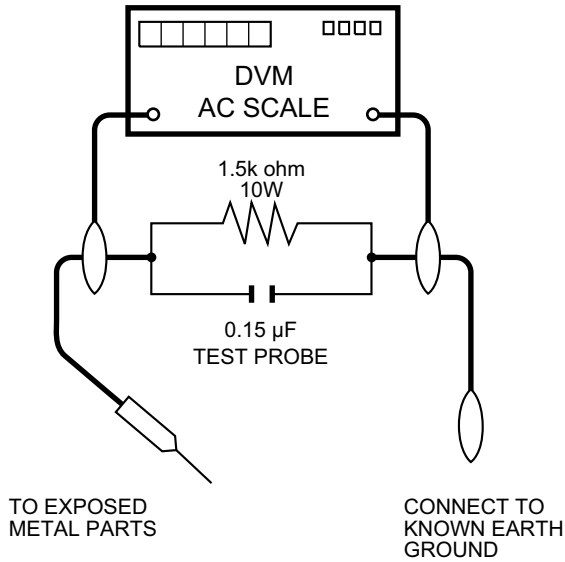


## SAFETY NOTICE

Many electrical and mechanical parts in LCD color television have special safety-related characteristics.

These characteristics are often not evident from visual inspection, nor can protection afforded by them be necessarily increased by using replacement components rated for higher voltage, wattage, etc.

Replacement parts which have these special safety characteristics are identified in this manual; electrical components having such features are identified by "⚠" and shaded areas in the Replacement Parts List and Schematic Diagrams.

For continued protection, replacement parts must be identical to those used in the original circuit.

The use of a substitute replacement parts which do not have the same safety characteristics as the factory recommended replacement parts shown in this service manual, may create shock, fire or other hazards.

# PRECAUTIONS A PRENDRE LORS DE LA REPARATION

■ **Ne peut effectuer la réparation qu' un technicien spécialisé qui s'est parfaitement accoutumé à toute vérification de sécurité et aux conseils suivants.**

## ■ AVERTISSEMENT

1. N'entreprendre aucune modification de tout circuit. C'est dangereux.
2. Débrancher le récepteur avant toute réparation.

**PRECAUTION**: POUR LA PROTECTION CONTINUE CONTRE LES RISQUES D'INCENDIE, REMPLACER LE FUSIBLE

F701 (125V 8A),
F4701, F5701 (250V 3A ~ 115°C)

## ■ VERIFICATIONS CONTRE L'INCEN-DIE ET LE CHOC ELECTRIQUE

**Avant de rendre le récepteur à l'utilisateur, effectuer les vérifications suivantes.**

3. Inspecter tous les faisceaux de câbles pour s'assurer que les fils ne soient pas pincés ou qu'un outil ne soit pas placé entre le châssis et les autres pièces métalliques du récepteur.
4. Inspecter tous les dispositifs de protection comme les boutons de commande non-métalliques, les isolants, le dos du coffret, les couvercles ou blindages de réglage et de compartiment, les réseaux de résistancecapacité, les isolateurs mécaniques, etc.
5. S'assurer qu'il n'y ait pas de danger d'électrocution en vérifiant la fuite de courant, de la facon suivante:

- Brancher le cordon d'alimentation directem-ent à une prise de courant de 120V. (Ne pas utiliser de transformateur d'isolation pour cet essai).
- A l'aide de deux fils à pinces, brancher une résistance de 1.5 kΩ 10 watts en parallèle avec un condensateur de 0.15μF en série avec toutes les pièces métalliques exposées du coffret et une terre connue comme une conduite électrique ou une prise de terre branchée à la terre.
- Utiliser un voltmètre CA d'une sensibilité d'au moins 5000Ω/V pour mesurer la chute de tension en travers de la résistance.
- Toucher avec la sonde d'essai les pièces métalliques exposées qui présentent une voie de retour au châssis (antenne, coffret métallique, tête des vis, arbres de commande et des boutons, écusson, etc.) et mesurer la chute de tension CA en-travers de la résistance. Toutes les vérifications doivent être refaites après avoir inversé la fiche du cordon d'alimentation. (Si nécessaire, une prise d'adpatation non polarisée peut être utilisée dans le but de terminer ces vérifications.)
  La tension de pointe mesurèe ne doit pas dépasser 0.75V (correspondante au courant CA de pointe de 0.5mA).
  Dans le cas contraire, il y a une possibilité de choc électrique qui doit être supprimée avant de rendre le récepteur au client.

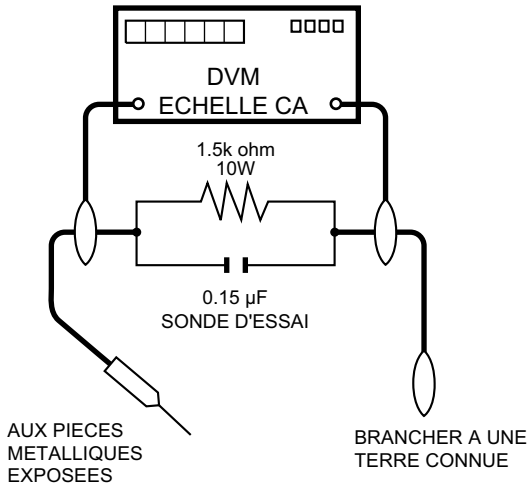


## AVIS POUR LA SECURITE

De nombreuses pièces, électriques et mécaniques, dans les téléviseur ACL présentent des caractéristiques spéciales relatives à la sécurité, qui ne sont souvent pas évidentes à vue. Le degré de protection ne peut pas être nécessairement augmentée en utilisant des pièces de remplacement étalonnées pour haute tension, puissance, etc.
Les pièces de remplacement qui présentent ces caractéristiques sont identifiées dans ce manuel; les pièces électriques qui présentent ces particularités sont identifiées par la marque "⚠" et hachurées dans la liste des pièces de remplacement et les diagrammes schématiques.

Pour assurer la protection, ces pièces doivent être identiques à celles utilisées dans le circuit d'origine. L'utilisation de pièces qui n'ont pas les mêmes caractéristiques que les pièces recommandées par l'usine, indiquées dans ce manuel, peut provoquer des électrocutions, incendies, radiations X ou autres accidents.

# PRECAUTIONS FOR USING LEAD-FREE SOLDER

## ■Employing lead-free solder

- “PWBs” of this model employs lead-free solder. The LF symbol indicates lead-free solder, and is attached on the PWBs and service manuals. The alphabetical character following LF shows the type of lead-free solder.

  Example:

Indicates lead-free solder of tin, silver and copper.

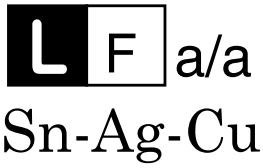


Indicates lead-free solder of tin, silver and copper.

## ■Using lead-free wire solder

- When fixing the PWB soldered with the lead-free solder, apply lead-free wire solder. Repairing with conventional lead wire solder may cause damage or accident due to cracks.

  As the melting point of lead-free solder (Sn-Ag-Cu) is higher than the lead wire solder by 40 °C, we recommend you to use a dedicated soldering bit, if you are not familiar with how to obtain lead-free wire solder or soldering bit, contact our service station or service branch in your area.

## ■Soldering

- As the melting point of lead-free solder (Sn-Ag-Cu) is about 220 °C which is higher than the conventional lead solder by 40 °C, and as it has poor solder wettability, you may be apt to keep the soldering bit in contact with the PWB for extended period of time. However, Since the land may be peeled off or the maximum heat-resistance temperature of parts may be exceeded, remove the bit from the PWB as soon as you confirm the steady soldering condition.

  Lead-free solder contains more tin, and the end of the soldering bit may be easily corroded. Make sure to turn on and off the power of the bit as required.

  If a different type of solder stays on the tip of the soldering bit, it is alloyed with lead-free solder. Clean the bit after every use of it.

  When the tip of the soldering bit is blackened during use, file it with steel wool or fine sandpaper.

- Be careful when replacing parts with polarity indication on the PWB silk.

Lead-free wire solder for servicing

| PARTS CODE | PRICE RANK | PART DELIVERY | DESCRIPTION |
|---|---|---|---|
| ZHNDAi123250E | BL | J | ϕ0.3mm 250g (1roll) |
| ZHNDAi126500E | BK | J | ϕ0.6mm 500g (1roll) |
| ZHNDAi12801KE | BM | J | ϕ1.0mm 1kg (1roll) |

# CHAPTER 1. SPECIFICATIONS

## [1] SPECIFICATIONS

| Item | | | | Model: LC-32D43U | Model: LC-37D43U |
|---|---|---|---|---|---|
| LCD panel | | | | 32″ Advanced Super View & BLACK TFT LCD | 37″ Advanced Super View & BLACK TFT LCD |
| Number of dots | | | | 3,147,264 dots (1366 × 768 × 3 dots) | |
| TV Function | TV-standard (CCIR) | | | American TV Standard ATSC/NTSC System | |
| | Receiving Channel | VHF/UHF | | VHF 2-13ch, UHF 14-69ch | |
| | | CATV | | 1-135ch (non-scrambled channel only) | |
| | | Digital Terrestrial Broadcast (8VSB) | | 2-69ch | |
| | | Digital cable[*1] (64/256 QAM) | | 1-135ch (non-scrambled channel only) | |
| | Audio multiplex | | | BTSC System | |
| Audio out | | | | 10W × 2 | |
| Terminals | Rear | INPUT 1 | | AV in, COMPONENT in | |
| | | INPUT 2 | | S-VIDEO in, AV in | |
| | | INPUT 3 | | Audio in, COMPONENT in | |
| | | INPUT 4 | | HDMI in with HDCP | |
| | | INPUT 5 | | Audio in, HDMI in with HDCP | |
| | | INPUT 6 | | 15 pin mini D-sub, Audio in (Ø 3.5 mm jack) | |
| | | ANTENNA | | 75Ω Unbalance, F Type ×1 for Analog (VHF/UHF/CATV) and Digital (AIR/CABLE) | |
| | | DIGITAL AUDIO OUTPUT | | Optical Digital audio output ×1 (PCM/Dolby Digital) | |
| | | OUTPUT | | Audio out | |
| OSD language | | | | English/French/Spanish | |
| Power Requirement | | | | AC 120 V, 60 Hz | |
| Power Consumption | | | | 175 W (0.95 W Standby with AC 120V) | 185 W (0.95 W Standby with AC 120V) |
| Weight | | w/o stand | | 36.4 lbs./16.5 kg | 43.0 lbs./19.5 kg |
| | | with stand | | 43.0 lbs./19.5 kg | 50.7 lbs./23.0 kg |
| Dimension[*2] (W × H × D) | | w/o stand | | $31^{11}/_{32} \times 20^{59}/_{64} \times 3^{53}/_{64}$ inch | $35^{61}/_{64} \times 23^{37}/_{64} \times 3^{53}/_{64}$ inch |
| | | with stand | | $31^{11}/_{32} \times 23^{13}/_{64} \times 9^{37}/_{64}$ inch | $35^{61}/_{64} \times 25^{27}/_{32} \times 11^{35}/_{64}$ inch |
| Operating temperature | | | | +32°F to +104°F (0°C to +40°C) | |

[*1] Emergency alert messages via Cable are unreceivable.
[*2] The dimensional drawings are shown on the inside back cover.

- As part of policy of continuous improvement, SHARP reserves the right to make design and specication changes for product improvement without prior notice. The performance specication gures indicated are nominal values of production units. There may be some deviations from these values in individual units.

# CHAPTER 2. OPERATION MANUAL

## [1] OPERATION MANUAL

# Part names

## TV (Front)

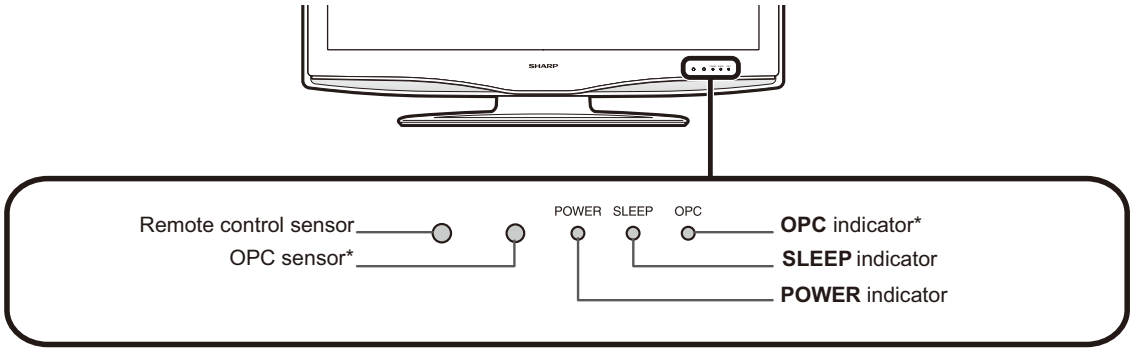


NOTE

*OPC: Optical Picture Control

## TV (Rear)

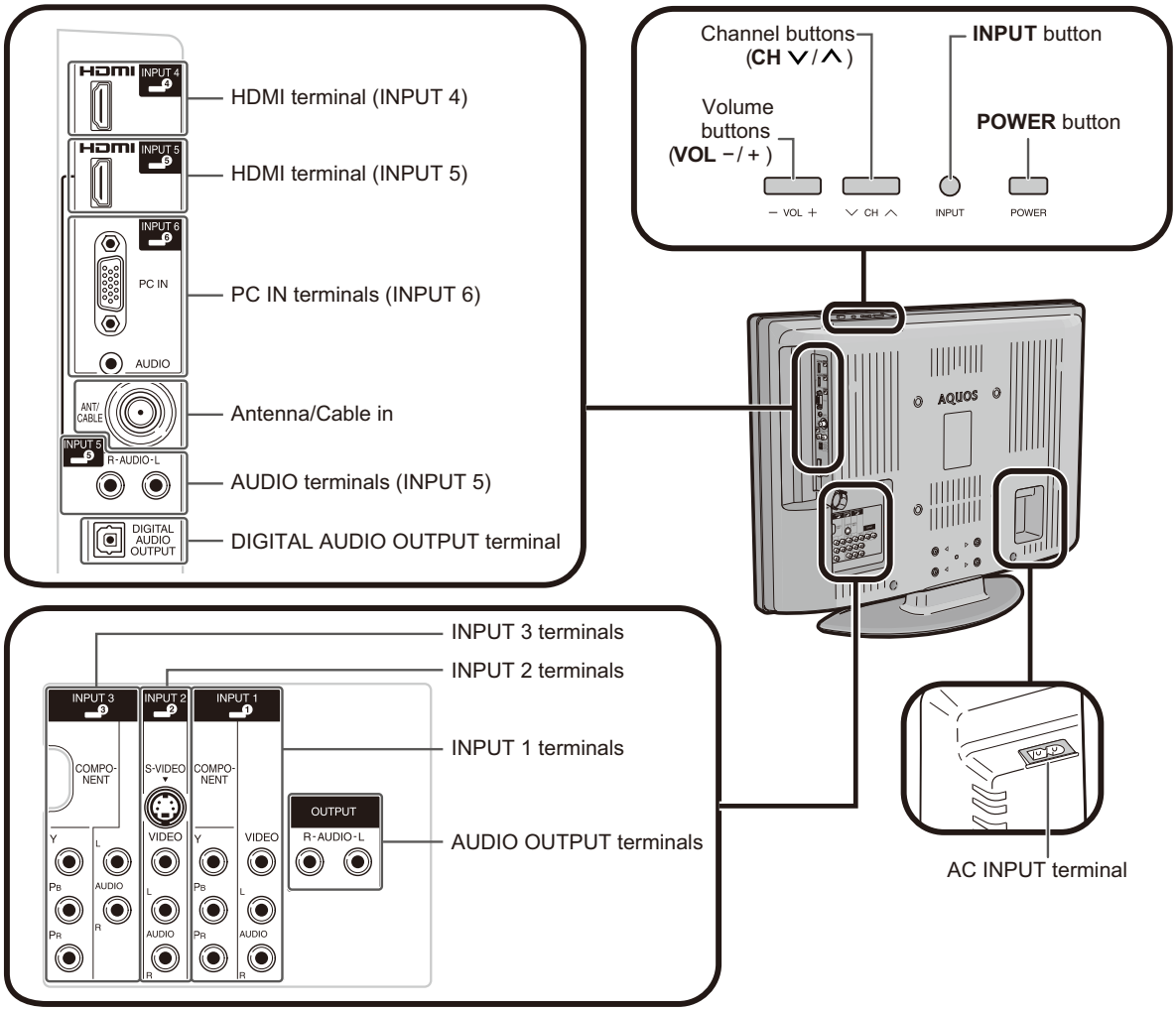

## Part names

### Remote control unit

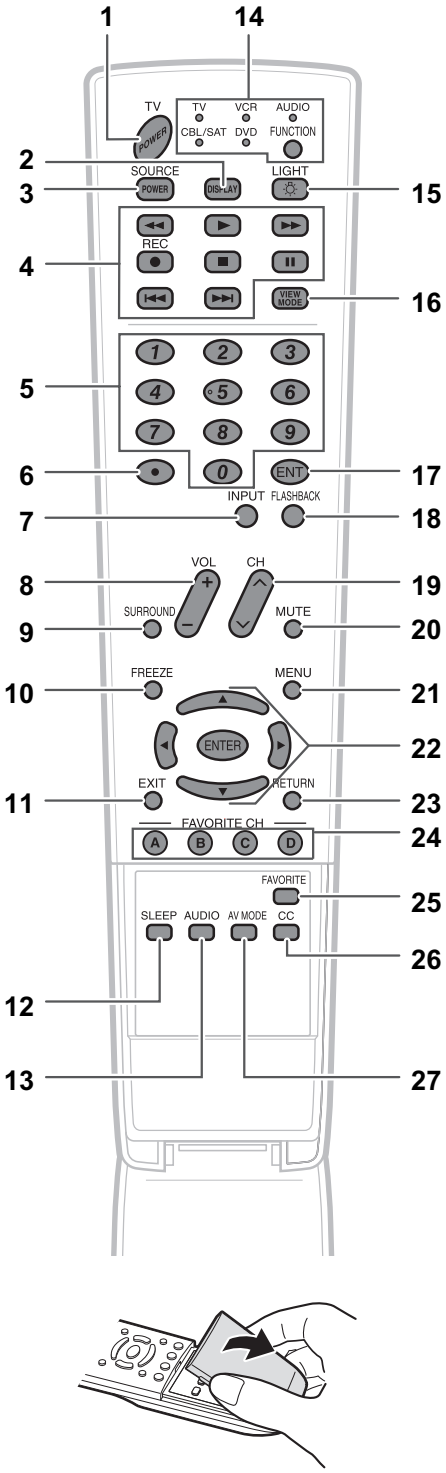


1 **TV POWER:** Switch the TV power on or enters standby mode.

2 **DISPLAY:** Display the channel information.

3 **SOURCE POWER:** Turns the power of the external equipment on and off.

4 **External equipment operational buttons:** Operate the external equipment.

5 **0 – 9:** Set the channel.

6 **• (DOT):**

7 **INPUT:** Select a TV input source. (TV, INPUT 1, INPUT 2, INPUT 3, INPUT 4, INPUT 5, INPUT 6)

8 **VOL ＋/－ :** Set the volume.

9 **SURROUND:** Select Surround settings.

10 **FREEZE:** Set the still image. Press again to return to normal screen.

11 **EXIT:** Turn off the menu screen.

12 **SLEEP:** Set the sleep timer.

13 **AUDIO:** Selects the MTS/SAP or the audio mode during multi-channel audio broadcasts.

14 **FUNCTION:** Switches the remote control for TV, CBL/SAT, VCR, DVD and AUDIO operation. Indicator lights up for the current mode.
* To enter the code registration mode, you need to press **FUNCTION** and **DISPLAY** at the same time.

15 **LIGHT ☼ :** When pressed all buttons on the remote control unit will light. The lighting will turn off if no operations are performed within about 5 seconds. This button is used for performing operations in low-light situations.

16 **VIEW MODE:** Select the screen size.

17 **ENT:** Jumps to a channel after selecting with the **0–9** buttons.

18 **FLASHBACK:** Return to the previous channel or external input mode.

19 **CH ∧/∨ :** Select the channel.

20 **MUTE:** Mute the sound.

21 **MENU:** Display the menu screen.

22 **▲/▼/◀/▶ ENTER:** Select a desired item on the screen.

23 **RETURN:** Return to the previous menu screen.

24 **FAVORITE CH**
**A, B, C, D:** Select 4 preset favorite channels in 4 different categories.
While watching, you can toggle the selected channels by pressing A, B, C and D.

25 **FAVORITE:** Register favorite channel.

26 **CC:** Display captions from a closed-caption source.

27 **AV MODE:** Select an audio or video setting.
(When the input source is TV, INPUT 1, 2 or 3: STANDARD, MOVIE, GAME, USER, DYNAMIC (Fixed), DYNAMIC. When the input source is INPUT 4, 5 or 6: STANDARD, MOVIE, GAME, PC, USER, DYNAMIC (Fixed), DYNAMIC)

**NOTE**

• When using the remote control unit, point it at the TV.

# QUICK REFERENCE

## Attaching the stand

- Before attaching (or detaching) the stand, unplug the AC cord from the AC INPUT terminal.
- Before performing work spread cushioning over the base area to lay the TV on. This will prevent it from being damaged.

**CAUTION**

- **Attach the stand in the correct direction.**
- **Be sure to follow the instructions. Incorrect installation of the stand may result in the TV falling over.**

**1** Confirm that there are 9 screws (all the same size) supplied with the TV.

**2**
① Set the post for the stand unit onto the box.
② Attach the base to the post.
③ Insert and tighten the 5 screws into the 5 holes on the bottom of the base.

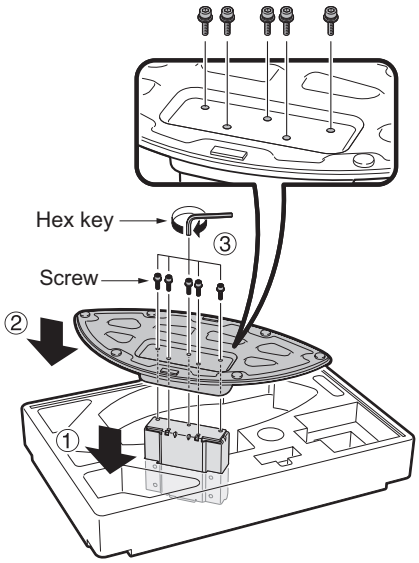


**3**
① Insert the stand into the openings on the bottom of the TV.
② Insert and tighten the 4 screws into the 4 holes on the rear of the TV.

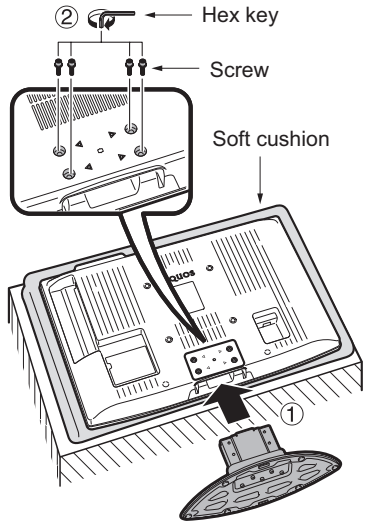


**NOTE**

- To detach the stand, perform the steps in reverse order.

# Basic adjustment settings

## Menu items for TV/INPUT 1/2/3

**Picture**

- OPC
- Backlight
- Contrast
- Brightness
- Color
- Tint
- Sharpness
- Advanced
  - Color Temp.
  - Black
  - I/P Setting
  - Film Mode
  - 3D-Y/C
  - Monochrome
  - Range of OPC

**Audio**

- Treble
- Bass
- Balance
- Surround

**Power Control**

- No Signal Off
- No Operation Off

**Setup**

- EZ Setup
- CH Setup
- Antenna Setup-DIGITAL
- Input Skip
- Input Label
- Parental CTRL
- Position
- Language
- Reset

**Option**

- Audio Only
- Digital Noise Reduction
- Input Select
- Output Select
- Color System
- Caption Setup
- Program Title Display
- Favorite CH

**Digital Setup**

- Audio Setup

## Menu items for HDMI/PC-IN

**Picture**

- OPC
- Backlight
- Contrast
- Brightness
- Color
- Tint
- Sharpness
- Advanced
  - Color Temp.
  - Black
  - I/P Setting
  - Film Mode
  - Monochrome
  - Range of OPC

**Audio**

- Treble
- Bass
- Balance
- Surround

**Power Control**

- No Signal Off
- No Operation Off

**Setup**

- Input Skip
- Input Signal
- Auto Sync.
- Input Label
- Fine Sync.
- Position
- Language
- Reset

**Option**

- Audio Only
- Digital Noise Reduction
- HDMI Setup
- Output Select

**NOTE**

- Some menu items may not be displayed depending on the selected input source.

# CHAPTER 3. DIMENSIONS

## [1] DIMENSIONS

### LC-32D43U

Unit: inch/(mm)

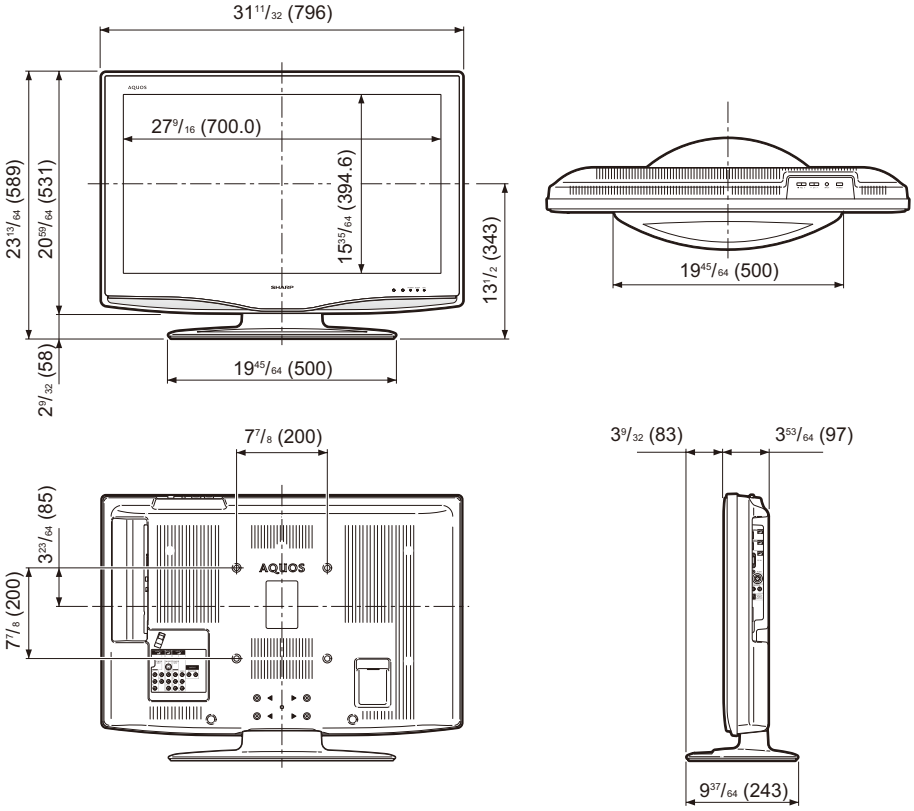


### LC-37D43U

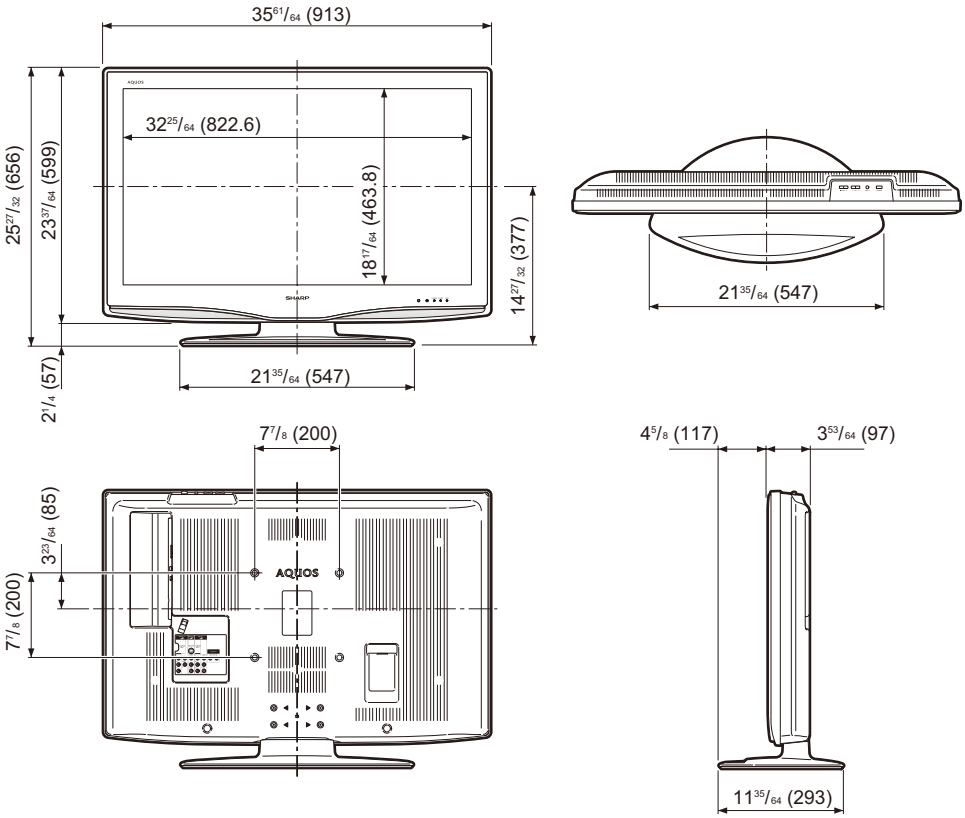

## - M E M O -

# SHARP PARTS GUIDE

No.SX6Y9LC37D43U

## LCD COLOR TELEVISION

# LC-32D43U
# MODELS LC-37D43U

CONTENTS


[1] CABINET AND MECHANICAL PARTS (LC-32D43U)

[2] CABINET AND MECHANICAL PARTS (LC-37D43U)

[3] SUPPLIED ACCESSORIES

[4] PACKING PARTS (NOT REPLACEMENT ITEM)

[5] SERVICE JIGS (USE FOR SERVICING)


Parts marked with "⚠" are important for maintaining the safety of the set. Be sure to replace these parts with specified ones for maintaining the safety and performance of the set.

SHARP CORPORATION

This document has been published to be used for after sales service only.
The contents are subject to change without notice.

# [1] CABINET AND MECHANICAL PARTS (LC-32D43U)

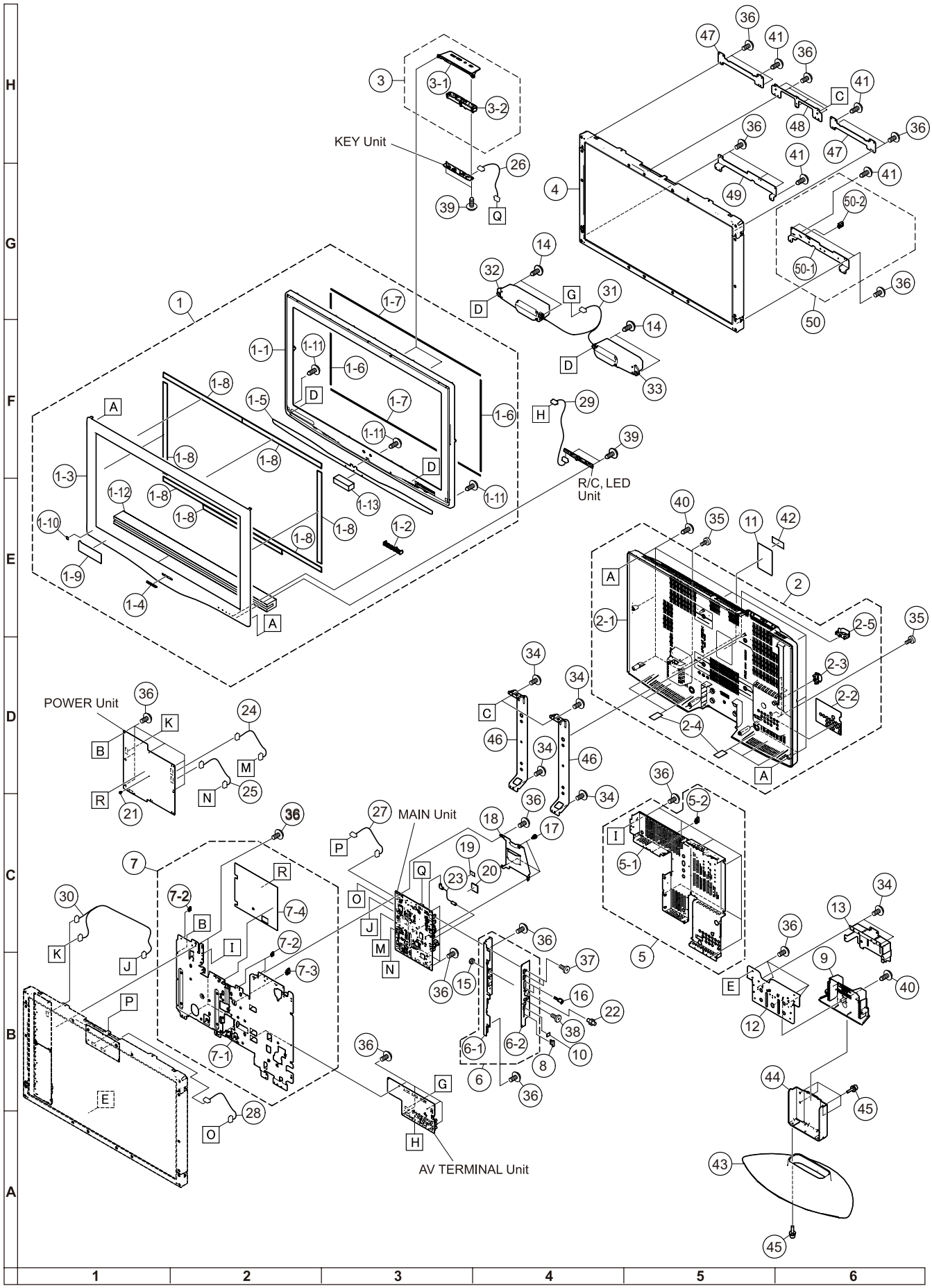

| NO. | PARTS CODE | PRICE RANK | NEW MARK | PART DELIVERY | DESCRIPTION |
|---|---|---|---|---|---|
| **[1] CABINET AND MECHANICAL PARTS (LC-32D43U)** | | | | | |
| 1 | CCABAB612WJ03 | BT | N | X | Front Cabinet Ass'y |
| 1-1 | Not Available | − | N | − | Front Cabinet |
| 1-2 | Not Available | − | | − | LED Cover |
| 1-3 | Not Available | − | N | − | Front Cover |
| 1-4 | Not Available | − | | − | Badge, SHARP |
| 1-5 | HPNLSA100WJSA | AY | N | X | SP-Net |
| 1-6 | Not Available | − | N | − | Spacer, x2 |
| 1-7 | Not Available | − | N | − | Spacer, x2 |
| 1-8 | Not Available | − | | − | Spacer, x7 |
| 1-9 | TLABZA635WJZZ | AD | | X | POP Label |
| 1-10 | TLABZB392WJSA | AF | N | X | POP Label |
| 1-11 | XJPSN30P08XS0 | AA | | J | Screw (for Front Cover), x3 |
| 1-12 | HDECSA014WJSA | AQ | N | X | Shine trim |
| 1-13 | Not Available | − | | − | Spacer |
| 2 | CCABBA950WJ01 | BH | N | X | Rear Cabinet Ass'y |
| 2-1 | Not Available | − | N | − | Rear Cabinet |
| 2-2 | Not Available | − | N | − | Terminal Label |
| 2-3 | LHLDWA057WJKZ | AE | | J | Wire Holder |
| 2-4 | PSPAHB078WJZZ | AS | N | X | Spacer, x6 |
| 2-5 | LHLDWA055WJKZ | AC | | | Wire Holder |
| 3 | CCOVAB929WJ01 | AS | N | X | Top Cover Ass'y |
| 3-1 | Not Available | − | S | − | Top Cover |
| 3-2 | Not Available | − | | − | Operation Button |
| 4 | R1LK315T3LF15 | EC | | J | 32" WIDE LCD Panel Module Unit |
| 5 | CSLDMB061WJ01 | AW | N | X | MAIN Shield Ass'y |
| 5-1 | Not Available | − | S | − | MAIN Shield |
| 5-2 | LHLDWA102WJKZ | AB | | J | Wire Holder, x3 |
| 6 | CANGKA902WJ01 | AN | N | X | Jack Angle Ass'y |
| 6-1 | Not Available | − | N | − | Jack Angle |
| 6-2 | Not Available | − | N | − | Jack Indicator |
| 7 | CCHSMA346WJ01 | AZ | N | X | Tray Chassis Ass'y |
| 7-1 | Not Available | − | N | − | Tray Chassis |
| 7-2 | LHLDWA102WJKZ | AB | | J | Wire Holder, x3 |
| 7-3 | LHLDWA120WJKZ | AB | | J | Wire Holder |
| 7-4 | Not Available | − | S | − | Barrier Sheet |
| 8 | GCOVAA678WJKA | AF | | X | SD Card Cover |
| 9 | GCOVAB931WJKA | AQ | N | X | Stand Area Cover |
| 10 | HiNDPB715WJSA | AC | | X | Terminal Label |
| 11 | HiNDPC239WJSA | AM | N | X | Model Label |
| 12 | LANGKA913WJM1 | BC | N | X | Stand Fix Angle |
| 13 | LANGKA914WJFW | AL | N | X | Stand Assist Angle |
| 14 | LX-HZA003WJFN | AC | | J | Screw (for SP-BOX), x4 |
| 15 | LX-NZ3047GEZZ | AA | | J | Nut |
| 16 | NSFTZ0134CEFW | AD | | J | Shaft, x2 |
| 17 | PCLiCA004WJKZ | AC | | J | Rivet, x3 |
| 18 | PRDARA414WJFW | AK | N | X | Heat Sink |
| 19 | PSPAZA635WJKZ | AC | | J | Cool Sheet |
| 20 | PSPAZA917WJKZ | AH | | J | Cool Sheet |
| 21 | PSPAZB030WJKZ | AB | | J | Spacer |
| 22 | QCNCWA496WJZZ | AK | | X | Connector (F-RCA) |
| 23 | QCNW-E249WJPZ | AH | | J | Connecting Cord (ANT IN) |
| 24 | QCNW-E257WJQZ | AH | | J | Connecting Cord (PE) |
| 25 | QCNW-E258WJQZ | AG | | J | Connecting Cord (PD) |
| 26 | QCNW-E266WJQZ | AF | | J | Connecting Cord (KM) |
| 27 | QCNW-E278WJQZ | AH | | J | Connecting Cord (SH) |
| 28 | QCNW-E703WJPZ | AX | | X | Connecting Cord (LV) |
| 29 | QCNW-F250WJQZ | AL | N | X | Connecting Cord (RA) |
| 30 | QCNW-F300WJQZ | AL | N | X | Connecting Cord (LA-LA-LB) |
| 31 | QCNW-F316WJQZ | AG | N | X | Connecting Cord (SP) |
| 32 | RSP-ZA215WJZZ | AY | N | X | Speaker (L) |
| 33 | RSP-ZA216WJZZ | AY | N | X | Speaker (R) |
| 34 | XBBS740P06000 | AA | | J | Screw (for ANG), x6 |
| 35 | XBBS930P06000 | AA | | J | Screw (for CAB-B), x5 |
| 36 | XBPS730P06WS0 | AA | | J | Screw (for PWB,ANG), x41 |
| 37 | XBPS830P06000 | AA | | J | Screw (for HDMI), x2 |
| 38 | XEBS930P08000 | AA | | J | Screw (forJack) |
| 39 | XEBS930P10000 | AA | | J | Screw (for LED), x2 (for SOUSA), x2 |
| 40 | XEBS940P16000 | AB | | J | Screw (for CAB-B), x10 |
| 41 | XEBSN40P10000 | AB | | J | Screw (for PANEL), x4 |
| 42 | Not Available | − | | − | No. Label |
| 43 | CDAi-A332WJ01 | | N | X | Stand Base Ass'y |
| 44 | Not Available | − | N | − | Stand Support |
| 45 | LX-BZA176WJF9 | AF | N | X | Screw (forStand), x9 |
| 46 | LANGTA414WJM1 | AP | N | X | Center Angle, x2 |
| 47 | LANGHA052WJFW | AG | N | X | Rug Angle Top, x2 |
| 48 | LANGHA051WJFW | AG | N | X | Center Angle Top |
| 49 | LANGKA929WJFW | AK | N | X | Rug Angle Bottom L |
| 50 | CANGKA930WJ01 | AL | N | X | Rug Angle Bottom R Ass'y |
| 50-1 | Not Available | − | N | − | Rug Angle Bottom R |
| 50-2 | LHLDWA120WJKZ | AB | | J | Wire Holder |

# [2] CABINET AND MECHANICAL PARTS (LC-37D43U)

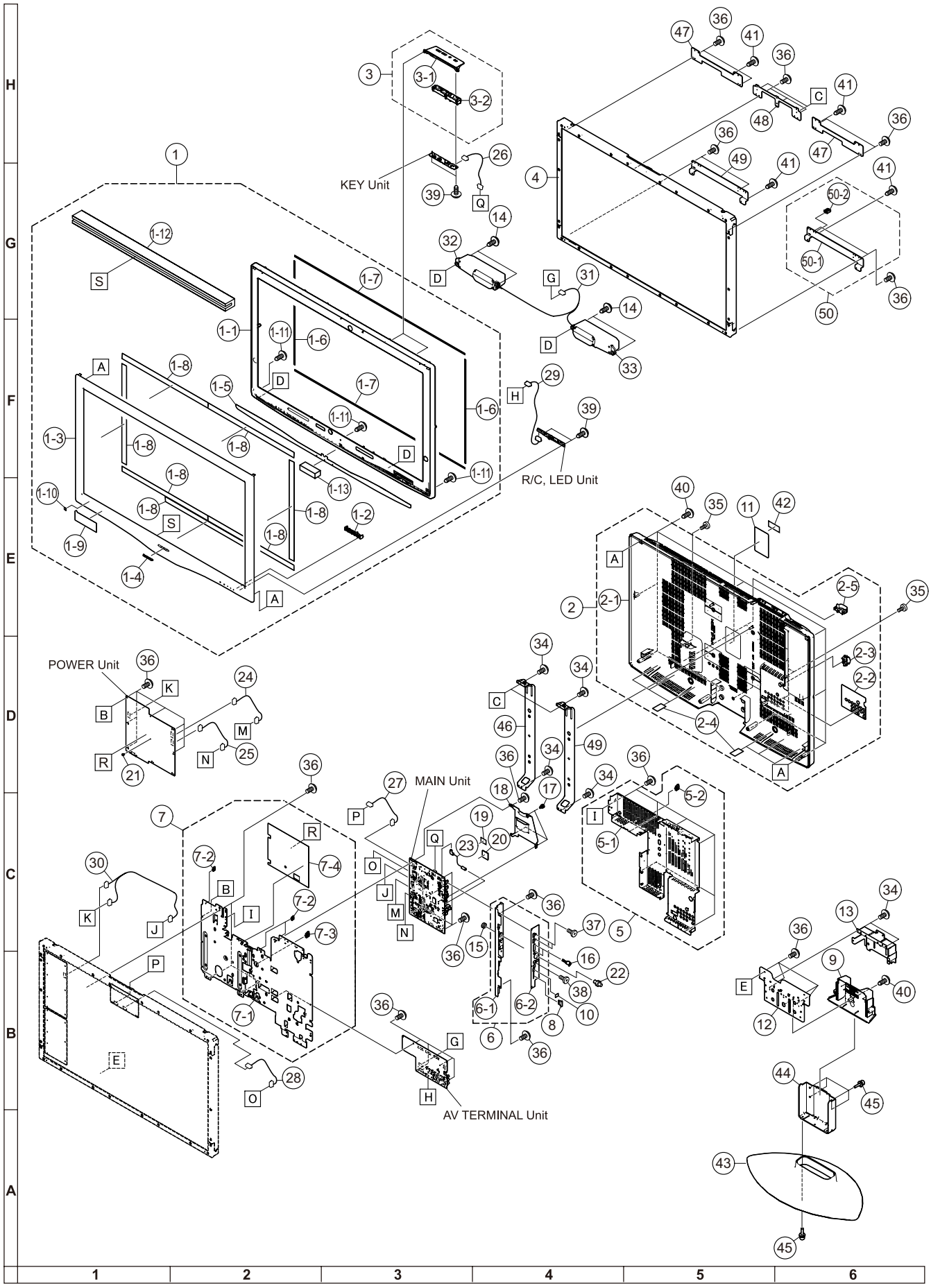

| NO. | PARTS CODE | PRICE RANK | NEW MARK | PART DELIVERY | DESCRIPTION |
|---|---|---|---|---|---|
| **[2] CABINET AND MECHANICAL PARTS (LC-37D43U)** | | | | | |
| 1 | CCABAB633WJ03 | BW | N | X | Front Cabinet Ass'y |
| 1-1 | Not Available | − | N | − | Front Cabinet |
| 1-2 | Not Available | − | | − | LED Cover |
| 1-3 | Not Available | − | N | − | Front Cover |
| 1-4 | Not Available | − | | − | Badge, SHARP |
| 1-5 | HPNLSA101WJSA | AZ | N | X | SP-Net |
| 1-6 | PSPAHA416WJZZ | AC | | J | Spacer, x2 |
| 1-7 | Not Available | − | | − | Spacer, x2 |
| 1-8 | Not Available | − | | − | Spacer, x7 |
| 1-9 | TLABZA635WJZZ | AD | | X | POP Label |
| 1-10 | TLABZB392WJSA | AF | N | X | POP Label |
| 1-11 | XJPSN30P08XS0 | AA | | J | Screw (for Front Cover), x3 |
| 1-12 | HDECSA015WJSA | AQ | N | X | Shine trim |
| 1-13 | Not Available | − | | − | Spacer |
| 2 | CCABBA962WJ01 | BD | N | X | Rear Cabinet Ass'y |
| 2-1 | Not Available | − | N | − | Rear Cabinet |
| 2-2 | Not Available | − | | − | Terminal Label |
| 2-3 | LHLDWA057WJKZ | AE | | J | Wire Holder |
| 2-4 | PSPAHB078WJZZ | AS | S | X | Spacer, x6 |
| 2-5 | LHLDWA055WJKZ | AC | | | Wire Holder |
| 3 | CCOVAB929WJ01 | AS | S | X | Top Cover Ass'y |
| 3-1 | Not Available | − | S | − | Top Cover |
| 3-2 | Not Available | − | | − | Operation Button |
| 4 | R1LK370T3LZ5BW | EZ | | J | 37" WIDE LCD Panel Module Unit |
| 5 | CSLDMB061WJ01 | AW | | X | MAIN Shield Ass'y |
| 5-1 | Not Available | − | S | − | MAIN Shield |
| 5-2 | LHLDWA102WJKZ | AB | | J | Wire Holder, x3 |
| 6 | CANGKA902WJ01 | AN | S | X | Jack Angle Ass'y |
| 6-1 | Not Available | − | N | − | Jack Angle |
| 6-2 | Not Available | − | N | − | Jack Indicator |
| 7 | CCHSMA346WJ01 | AZ | | X | Tray Chassis Ass'y |
| 7-1 | Not Available | − | N | − | Tray Chassis |
| 7-2 | LHLDWA102WJKZ | AB | | J | Wire Holder, x3 |
| 7-3 | LHLDWA120WJKZ | AB | | J | Wire Holder |
| 7-4 | Not Available | − | S | − | Barrier Sheet |
| 8 | GCOVAA678WJKA | AF | | X | SD Card Cover |
| 9 | GCOVAB931WJKA | AQ | S | X | Stand Area Cover |
| 10 | HiNDPB715WJSA | AC | | X | Terminal Label |
| 11 | HiNDPC240WJSA | AH | N | X | Model Label |
| 12 | LANGKA913WJM1 | BC | | X | Stand Fix Angle |
| 13 | LANGKA914WJFW | AL | | X | Stand Assist Angle |
| 14 | LX-HZA003WJFN | AC | | J | Screw (for SP-BOX), x4 |
| 15 | LX-NZ3047GEZZ | AA | | J | Nut |
| 16 | NSFTZ0134CEFW | AD | | J | Shaft, x2 |
| 17 | PCLiCA004WJKZ | AC | | J | Rivet, x3 |
| 18 | PRDARA414WJFW | AK | S | X | Heat Sink |
| 19 | PSPAZA635WJKZ | AC | | J | Cool Sheet |
| 20 | PSPAZA917WJKZ | AH | | J | Cool Sheet |
| 21 | PSPAZB030WJKZ | AB | | J | Spacer |
| 22 | QCNCWA496WJZZ | AK | | X | Connector (F-RCA) |
| 23 | QCNW-E249WJPZ | AH | | J | Connecting Cord (ANT IN) |
| 24 | QCNW-E257WJQZ | AH | | J | Connecting Cord (PE) |
| 25 | QCNW-E258WJQZ | AG | | J | Connecting Cord (PD) |
| 26 | QCNW-E266WJQZ | AF | | J | Connecting Cord (KM) |
| 27 | QCNW-E278WJQZ | AH | | J | Connecting Cord (SH) |
| 28 | QCNW-E703WJPZ | AX | | X | Connecting Cord (LV) |
| 29 | QCNW-F265WJQZ | AM | N | X | Connecting Cord (RA) |
| 30 | QCNW-F271WJQZ | AM | N | X | Connecting Cord (LA-LA-LB) |
| 31 | QCNW-F272WJQZ | AH | N | X | Connecting Cord (SP) |
| 32 | RSP-ZA215WJZZ | AY | N | X | Speaker (L) |
| 33 | RSP-ZA216WJZZ | AY | N | X | Speaker (R) |
| 34 | XBBS740P06000 | AA | | J | Screw (for ANG), x6 |
| 35 | XBPS930P08JS0 | AB | | J | Screw (for CAB-B), x5 |
| 36 | XBPS730P06WS0 | AA | | J | Screw (for PWB,ANG), x42 |
| 37 | XBPS830P06000 | AA | | J | Screw (for HDMI), x2 |
| 38 | XEBS930P08000 | AA | | J | Screw (for JACK) |
| 39 | XEBS930P10000 | AA | | J | Screw (for LED), x2 (for SOUSA), x2 |
| 40 | XEBS940P16000 | AB | | J | Screw (for CAB-B), x10 |
| 41 | XEBSN40P10000 | AB | | J | Screw (for PANEL), x4 |
| 42 | Not Available | − | | − | No. Label |
| 43 | CDAi-A337WJ01 | | N | X | Stand Base Ass'y |
| 44 | Not Available | − | | − | Stand Support |
| 45 | LX-BZA176WJF9 | AF | N | X | Screw (for Stand), x9 |
| 46 | LANGTA417WJFW | AP | N | X | Center Angle, x2 |
| 47 | LANGKA932WJFW | AG | N | X | Rug Angle Top LR, x2 |
| 48 | LANGKA916WJFW | AG | N | X | Chassis Fix Angle Top |
| 49 | LANGKA931WJFW | AK | N | X | Rug Angle Bottom LR |
| 50 | CANGKA931WJ01 | AL | N | X | Rug Angle Bottom LR Ass'y |
| 50-1 | Not Available | − | N | − | Rug Angle Bottom LR |
| 50-2 | LHLDWA120WJKZ | AB | | J | Wire Holder |
| 51 | QCNW-F273WJQZ | AG | N | X | Connecting Cord (MODEL SETTING) |

# [3] SUPPLIED ACCESSORIES

| X1 Cable Band | X2 Cable Clamp | X3 AC Cord | X4 Remote Control Unit |
|---|---|---|---|
| 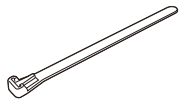 | 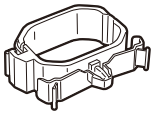 | 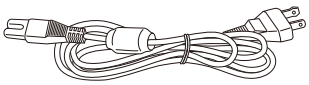 | 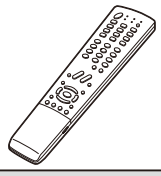 |
| **X5 Operation Manual** | **X6 "AAA" Size Battery** | **X9 Stand Unit** | |
| 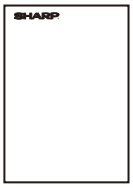 | 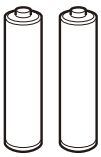 | 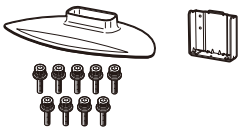 X9-1 | |

| NO. | PARTS CODE | PRICE RANK | NEW MARK | PART DELIVERY | DESCRIPTION |
|---|---|---|---|---|---|
| **[3] SUPPLIED ACCESSORIES** | | | | | |
| X1 | LHLDWA083WJ00 | AD | | J | Cable Band |
| X2 | LHLDWA131WJKZ | AE | | J | Cable Clamp |
| ⚠ X3 | QACCDA039WJPZ | AQ | | J | AC Cord |
| X4 | RRMCGA535WJSA | AY | | X | Remote Control Unit |
| X5 | TiNS-D004WJZZ | AM | N | | Operation Manual |
| X6 | Not Available | – | | – | "AAA" Size Battery |
| X7 | TCADEA208WJZZ | AD | N | X | Enquete Card |
| X8 | Not Available | – | N | – | Caution Card |
| X9 | CDAi-A332WJ02 | BM | N | X | Stand Unit [LC-32D43U] |
| X9 | CDAi-A337WJ02 | BP | N | X | Stand Unit [LC-37D43U] |
| X9-1 | UKOGLA001WJZZ | AK | | X | Tool for Stand |
| X10 | TGAN-A768WJZZ | AD | | X | Extend warranty |

## [4] PACKING PARTS (NOT REPLACEMENT ITEM)

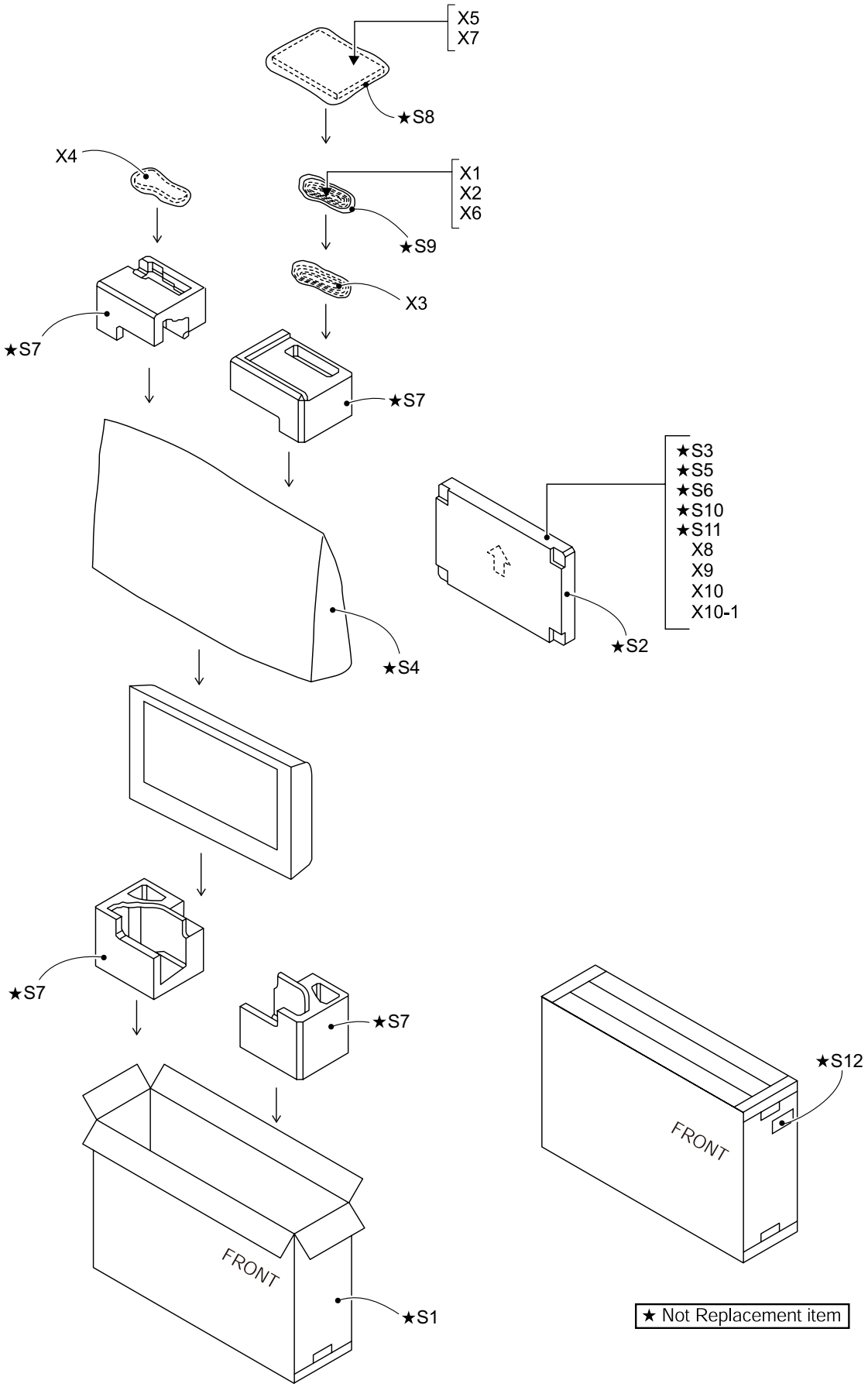

| NO. | PARTS CODE | PRICE RANK | NEW MARK | PART DELIVERY | DESCRIPTION |
|---|---|---|---|---|---|
| **[4] PACKING PARTS (NOT REPLACEMENT ITEM)** | | | | | |
| S1 | SPAKCD351WJZZ | − | N | − | Packing Case [LC-32D43U] |
| S1 | SPAKCD352WJZZ | − | N | − | Packing Case [LC-37D43U] |
| S2 | SPAKFB119WJZZ | − | N | − | Stand Case [LC-32D43U] |
| S2 | SPAKFB132WJZZ | − | N | − | Stand Case [LC-37D43U] |
| S3 | SPAKFB120WJZZ | − | N | − | Stand Pad [LC-32D43U] |
| S3 | SPAKFB133WJZZ | − | N | − | Stand Pad [LC-37D43U] |
| S4 | SPAKPA794WJZZ | − | N | − | Wrapping Paper (Monitor) [LC-32D43U] |
| S4 | SPAKPA795WJZZ | − | N | − | Wrapping Paper (Monitor) [LC-37D43U] |
| S5 | SPAKPA796WJZZ | − | N | − | Mirror Mat Base [LC-32D43U] |
| S5 | SPAKPA797WJZZ | − | N | − | Mirror Mat Base [LC-37D43U] |
| S6 | SPAKPA798WJZZ | − | N | − | Mirror Mat Sup |
| S7 | SPAKXB306WJZZ | − | N | − | Packing Add. [LC-32D43U] |
| S7 | SPAKXB320WJZZ | − | N | − | Packing Add. [LC-37D43U] |
| S8 | SSAKA0101GJZZ | − | | − | Polyethylene Bag |
| S9 | SSAKAA032WJZZ | − | | − | Polyethylene Bag |
| S10 | SSAKHA020WJZZ | − | | − | Polyethylene Bag (for Screw) |
| S11 | SSAKHA033WJZZ | − | N | − | Polyethylene Bag (for Cloth) |
| S12 | TLABKA009WJZZ | − | | − | No. Label |
| **[5] SERVICE JIGS (USE FOR SERVICING)** | | | | | |
| N | QCNW−D483WJQZ | AX | | J | Connecting Cord (PE (PA) 12pin 100cm) |
| 0 | | | | | MAIN to POWER Unit |
| N | QCNW−E068WJQZ | AS | | J | Connecting Cord (PD (MI) 6pin 100cm) |
| 0 | | | | | MAIN to POWER Unit |
| N | QCNW−F304WJQZ | AV | | J | Connecting Cord (LA/LB 4p-8p 130cm) |
| 0 | | | | | MAIN to INVERTER Unit |
| 0 | | | | | Connecting Cord (LA 10p-14p 100cm) |
| 0 | | | | | POWER to INVERTER Unit |
| N | QCNW−E673WJPZ | BP | | J | Connecting Cord (LV 30pin 100cm) |
| 0 | | | | | MAIN to LCD CONTROL Unit |
| N | QCNW−E674WJQZ | AS | | J | Connecting Cord (SH 7pin 100cm) |

# - M E M O -

SHARP

**COPYRIGHT © 2007 BY SHARP CORPORATION**

ALL RIGHTS RESERVED.

No Part of this publication may be reproduced,
stored in a retrieval system, ortransmitted in
any from or by any means, electronic, mechanical,
photocopying, recording, orotherwise, without
prior written permission of the publisher.

Jan. 2007 Printed in Japan
TQ2092-S SY. KG

SHARP CORPORATION
AV Systems Group
CS PromotionCenter
Yaita,Tochigi 329-2193, Japan